Prevas test concept for automotive and industrial applications

1 History

xMove started 15 years ago when we started providing test systems for the automotive and industrial industry. We found common issues that we solved by similar solutions.

Our history from providing advanced solutions for telecom gave us the knowledge in systemizing test solutions containing both hardware and software in a modular way.

That knowledge made us realize the value of identifying modules and concept in order to provide solutions that are flexible and easy to maintain.

2 xMove

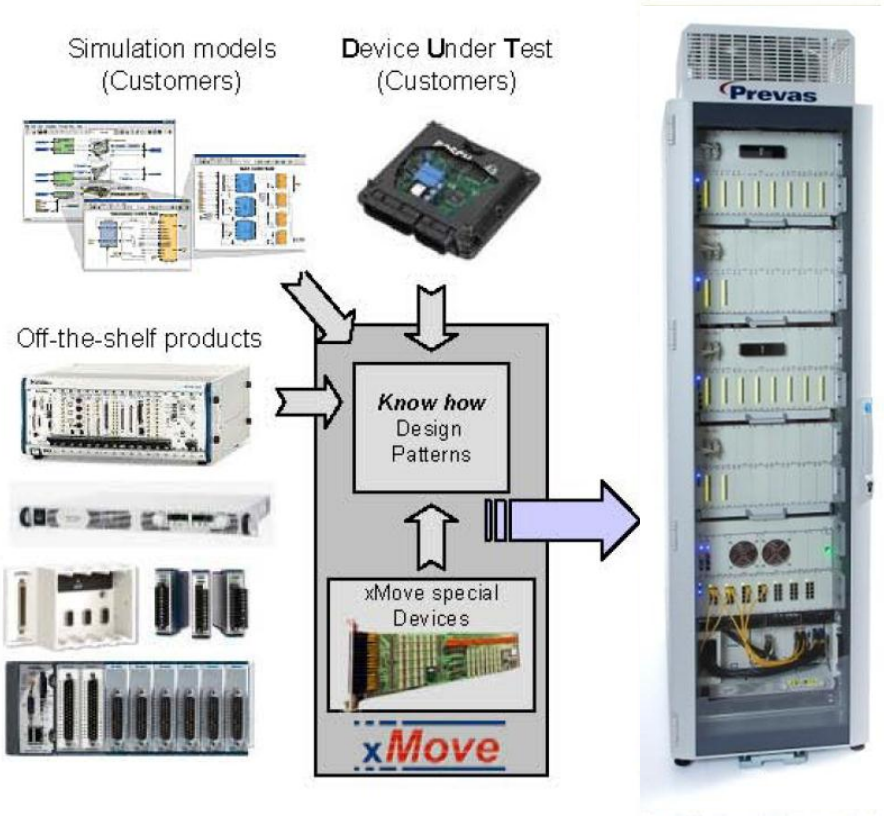

Figure 1, xMove concept

2.1 Concept

Prevas xMove concept provides re-usable ideas, architectures and design patterns that quickly can be adapted to a customized test system.

Our vision is that a test system, to its greatest extent, shall be based on open platforms and standard products, in order to assure long-term support and best performance versus cost ratio.

The xMove concept also includes a number of Prevas owned devices; both software and hardware, as a complement when no commercial products have been available.

2.2 Applications

- **Functional and performance testing**
- **Hardware In the Loop (HIL) simulation**
- **Repair test**
- **Production test**

Our design pattern is scalable with distributed I/O from a single device under test stand-alone tester to complete system test with over 30 units interconnected.

2.3 Contents

- **Standard PC platform** (PC or the industrial PC platform, PXI)
  - Ordinary PC:s are cost effective and upgradeable
  - Operated in real-time if needed (LabVIEW RT/Linux)

- **Distributed I/O**
  - I/O is close to the test object
  - Scalable and easy to maintain

- **Software reconfigurable bus distribution for CAN/1587**

- **Distributed FPGA I/O technology**
  - Change hardware behavior in software
  - Advanced sensor simulation
  - Implement advanced communication interfaces
  - Light high-speed simulation close to test object

- **Integration of standard simulation tools or other IP when needed**
  - Matlab/Simulink, MatrixX
  - C, C++, VHDL

- **High density fault injection boards with:**
  - Remote control and status reading
  - Signal conditioning
  - Load switching
  - Brake out panels and LED indication
  - Piggyback area for custom signal conditioning

2.4 The Electronic Control Unit (ECU)

Our concept is made to provide solutions for testing one or several ECU's.

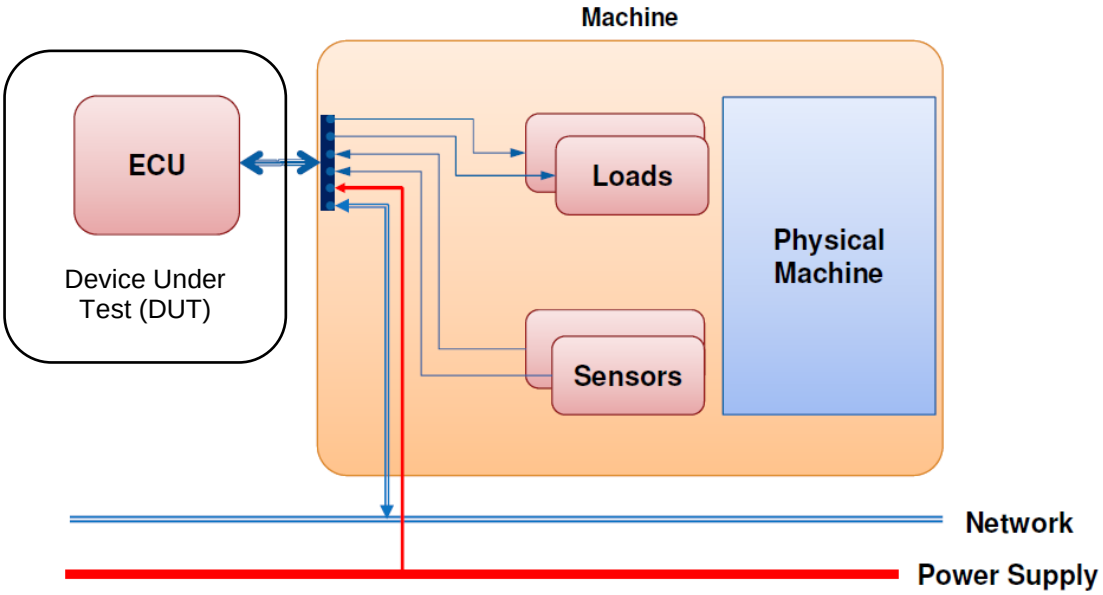

Figure 2, ECU I/O Signals

Historically the ECU is an electronic unit equipped with a number of input and output signals and electronic bus and power supply, today testing ECUs faces new challenges.

<u>Today's ECU Test challenges:</u>

- The ECU may be equipped with high speed digital interfaces such as Ethernet, RF interfaces for GPS, W-lan or 3/4G.

  This requires the test environment to be able to provide a mix of different type of signals.

- Part of the embedded software in the ECUs is the built in test (BIT). The BIT compares the input and output signals with the expected signals and detects any mismatch.

  This requires the test environment to be able to accurate emulate the signals in order to avoid error detection by the BIT when testing.

- The hardware is expensive to design and often used for a number of different applications (variants).

  This requires the test environment to be able to reconfigure the system in order to test the different applications (variants).

3 xMove System Architecture (Hardware)

3.1 Interface box

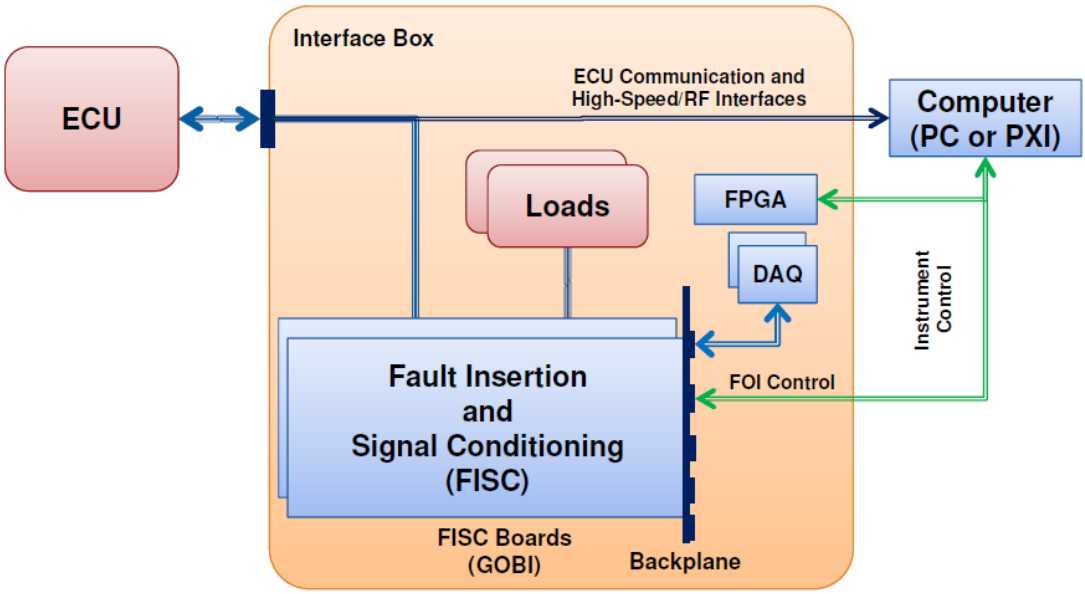

Figure 3, System Architecture

The xMove architecture is built using one or several interface boxes.

(Smaller systems can also be made using desktop box, see chapter 6.6)

High speed signals and RF signals are routed thru the interface box direct to the computer, as these signals are not suited for distribution due to bandwidth.

<u>xMove provide following functions in the interface box:</u>

- **Fault Insertion and Signal conditioning**
  The signal conditioning adapts to the signals to and from the ECU and enables the use of standard DAQ. The FPGA technology combined with the signal conditioning enables advanced signal simulations. For details regarding DAQ see chapter 6.4. The fault insertion provides functions for braking up the signal, making short circuit to either ground or Supply. For FISC board details see chapter 6.3.
- **Loads**
  The loads are in many cases actual loads wired into the interface box. The loads are fitted on an exchangeable plate for easy replacement.
- **DAQ**
  The DAQ is commercial input and output. We prefer to use the cRIO modules from National Instruments combined with the FPGA technology in order to provide a flexible platform. Other DAQ can be used upon request.

3.2 Power supply

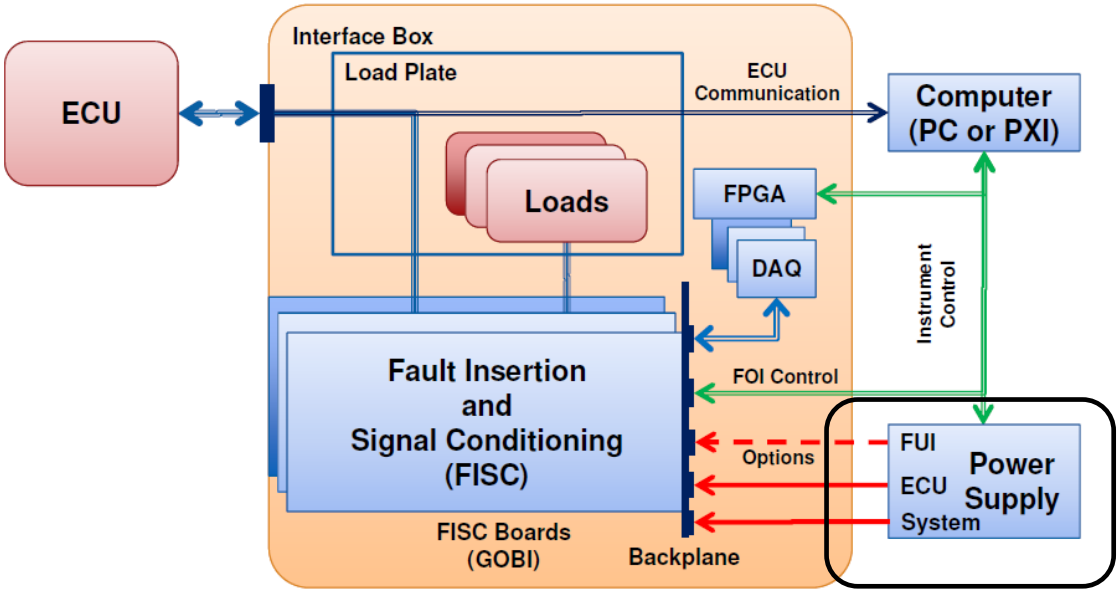

Figure 4, Power supply

Our concept is built for use of minimum of two power supplies, one for the test system and the other for the ECU.

As the system supply is isolated from the ECU supply, accurate measurements can be done without disturbance, even when the ECU generated high current PWM signals.

The system can also be equipped with a third, faster power supply, capable of generating and receiving current in order to provide advanced fault insertions applied to any signal.

The fault insertion bus may also be used for built in testing of the test system.

3.3 Test of a network of ECU's

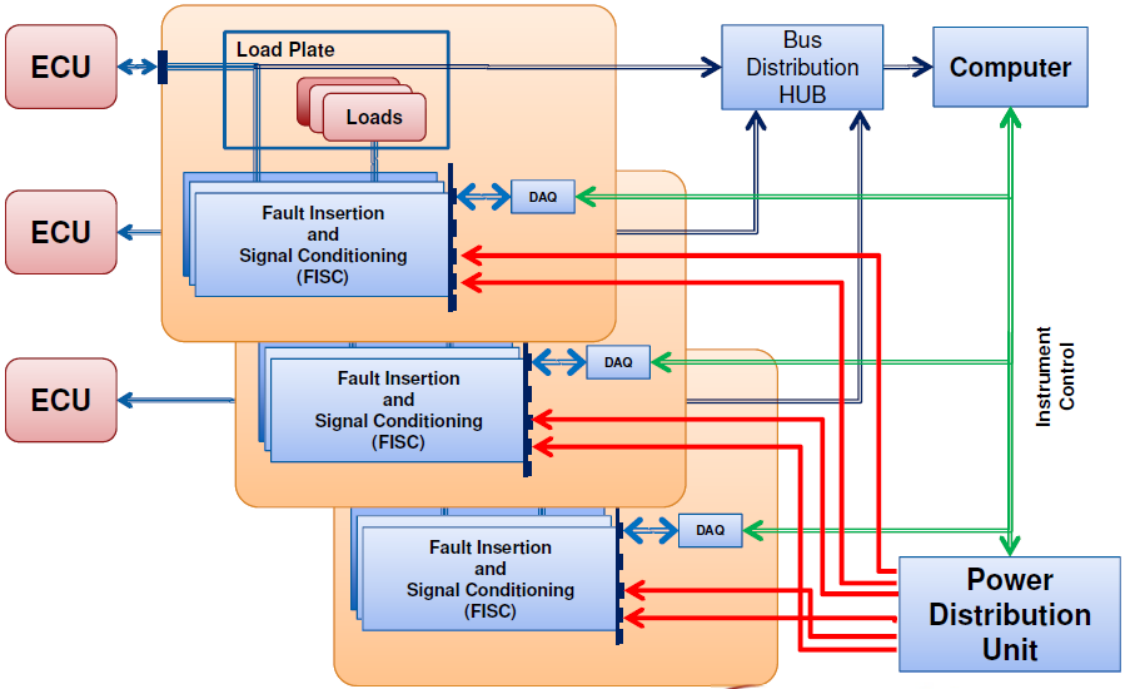

Figure 5, Network of ECU's testing

The interface box concept, with distributed DAQ, makes it easy to scale the test systems from one ECU to over 20 ECUs if required.

For larger solutions, we also provide a bus distribution hub for CAN or similar interfaces and a power distribution unit.

The Bus distribution hub distributes the industrial interfaces whitin the test system such as CAN and 1587 and is described in chapter 6.1

The power distribution is described in chapter 6.2

For details regarding the physical rack, see chapter 6.8

4 Software

Each system we provide contains customized software chosen upon the need from the customer. We support most of the software development environments such as C, C++, .Net, Python. We can also integrate with tools from vendors such as d-Space or Vector.

However for customers not using any other tools we recommend LabVIEW. xMove also contain a number of software modules in order to minimize the software development.

For larger solutions, we recommend the use of automatic test platforms, such as TestStand or VeriStand in order to further minimize the development and provide solutions that minimizes the need of maintenance.

4.1 TestStand

TestStand is the most used test administrator for automatic test execution (ATE). TestStand is a complete development tool in order to support all different ATE applications.

Our framework for TestStand enables us to rapidly provide a customized ATE solution with a structure providing full tractability in all aspects of the testing such as: requirement- release- and result- handling.

By use of our framework Prevas can provide a complete customized ATE system.

By this we can easily define the system configuration and deployment, provide a standard operator interface (GUI) and test case framework. Finally we can also provide customized well documented training material for both user and administrator.

4.2 VeriStand

VeriStand is a National Instruments software environment for real-time simulation and test. The tool enables the use of real time testing and is fully supported by xMove.

When there is a need for real-time testing this platform provides a solution that can be configured to run out of the box and still provides the flexibly to adapt to any custom needs.

Our GOBI board is available as a custom device in order to be controlled by VeriStand.

For more information regarding VeriStand see www.ni.com/Veristand

4.3 LabVIEW

We recommend LabVIEW as we consider it to be the most efficient tool for these types of applications.

LabVIEW is a software development tool that is over 15 years old. LabVIEW have during this time evolved into a complete software development tool not only for windows applications but also for real-time and FOGA applications.

For further customized solutions we use our own software Viking. In addition we also have a large library of functions available when we need to develop customer specific parts.

5 Supporting processes

5.1 Project model and CM management

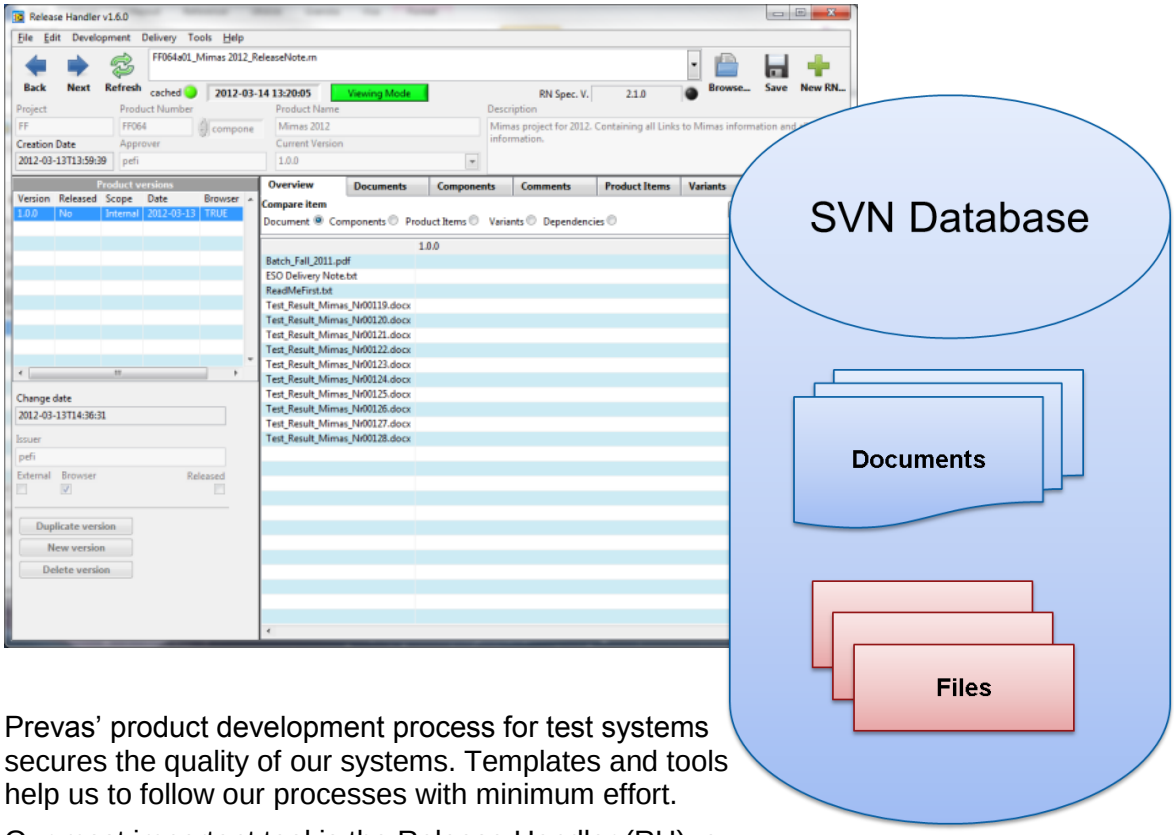

Prevas' product development process for test systems secures the quality of our systems. Templates and tools help us to follow our processes with minimum effort.

Our most important tool is the Release Handler (RH), a configuration management system adapted to test system development.

RH tracks all versions of all files (Software, List of materials, drawings etc.) related to our systems and links them together for each system release.

The RH links documents and files stored in subversion. The linking is done by XML files that are also stored in Subversion, those CML file will then correspond to an article.

Each article is then defined with an article number and version.

As for each version, we can track what documents (document number and version) and files (name and version) are valid for that specific version.

Then the articles are linked using the same tool into unit and systems.

By doing this we can in any time keep track of the status of each system at any given time

This document structure is also available for our customer to use after the system is delivered

This is critical for any type of system delivery as we need to know what is delivered.

5.2 Documentation and configuration

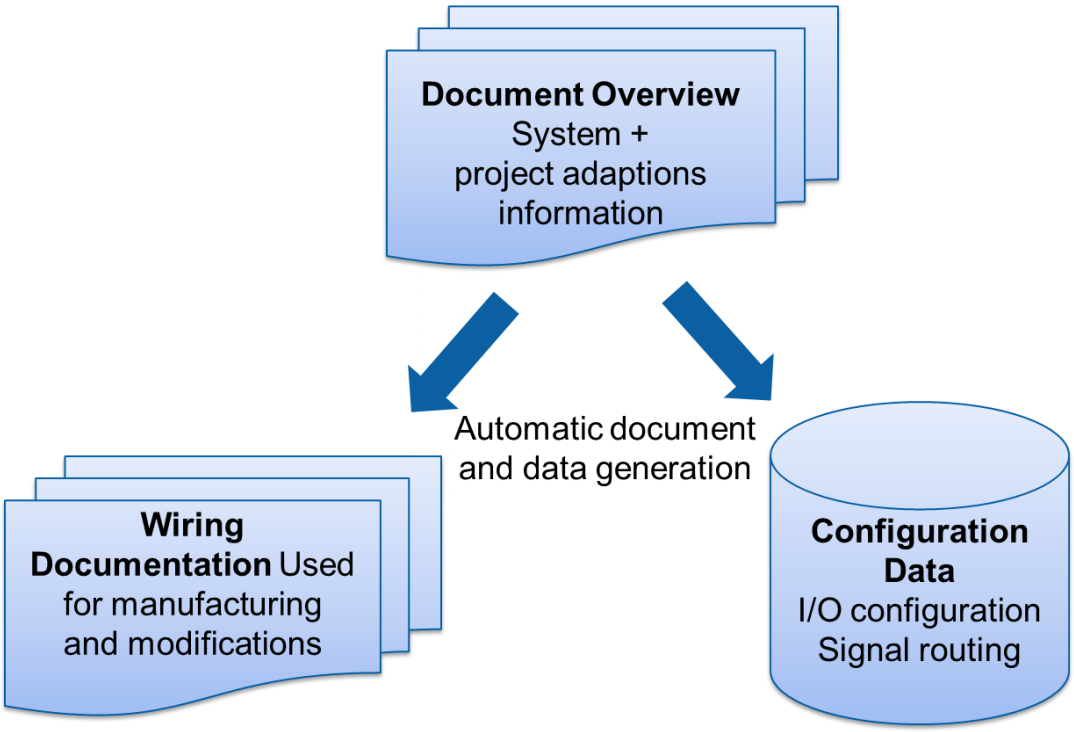

When operating systems with over 1000 signals it is important to be able to trust the documentation. When the system is built to easy be modified it is important that the documentation also can be updated accordingly.

One major document in the xMove concept is the electrical overview document.

The electrical overview contains the signal routing and configuration of each signal in the system.

The document is created when specifying the system for each customer and is made using Microsoft Visio. The document also contains macros enabling automatic generation of sub documents for manufacturing and maintenance. It is also used for generating configuration files needed for the software operating the system.

The document overview is also provided to our customers after delivery to be used when maintaining the systems.

6 Detail descriptions

6.1 Bus distribution HUB (BDH)

The BDH provides software control of the bus configuration for 1587 or CAN interfaces.

This enables automatic testing of different bus architectures.

Each BDH handles up to 8 connections and provides:

- **Open circuit**
- **Short circuit to GND or VCC**
- **Each connected device (ECU) can be:**
  - **Bypassed**
  - **Connected in chain with the bus**
  - **Connected in a star bus**

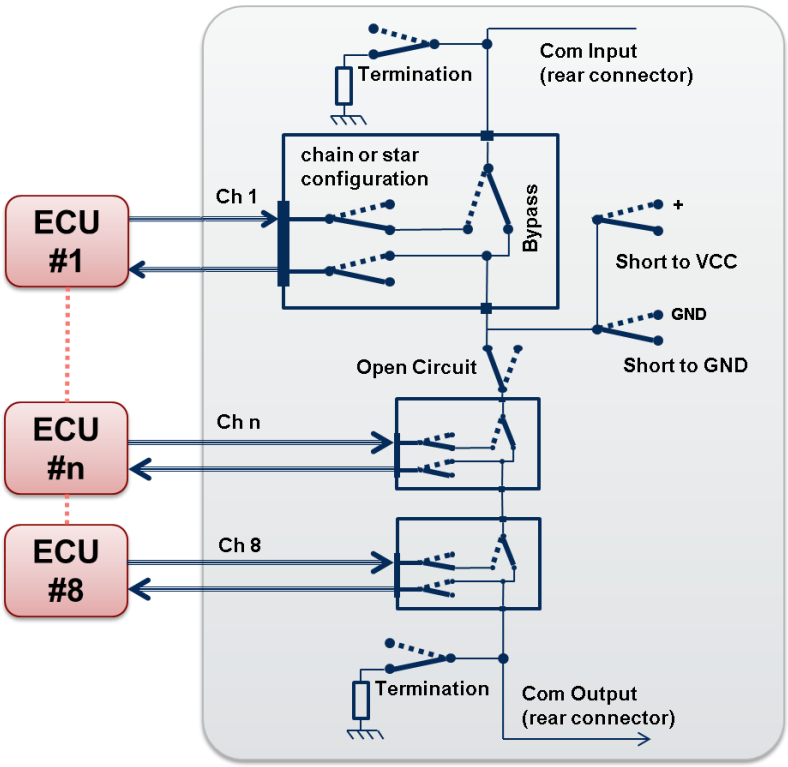

6.2 Power Distribution Unit

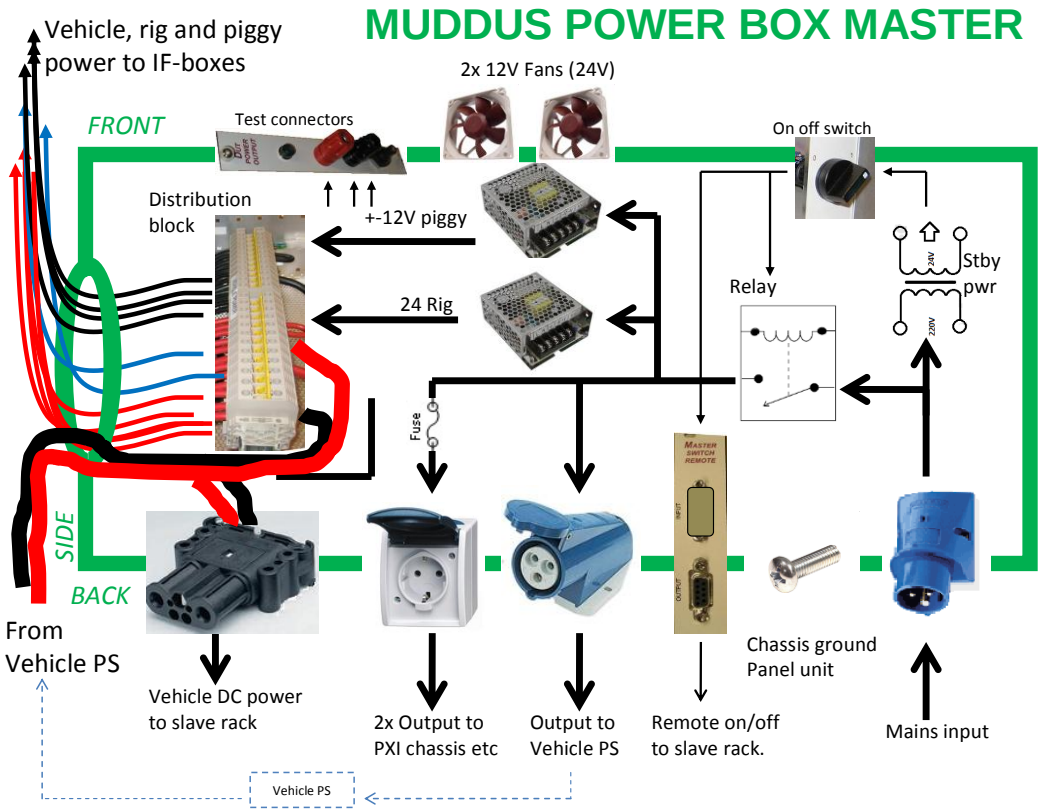

Figure 6, Rig power distribution box

The Power distribution controls all power used in the system, both low and high voltage.

Instruments and other components are controlled by the Main switch on the master rack.

Additional slave racks are connected to the power distribution unit in the main rig.

6.3 The GOBI FISC board

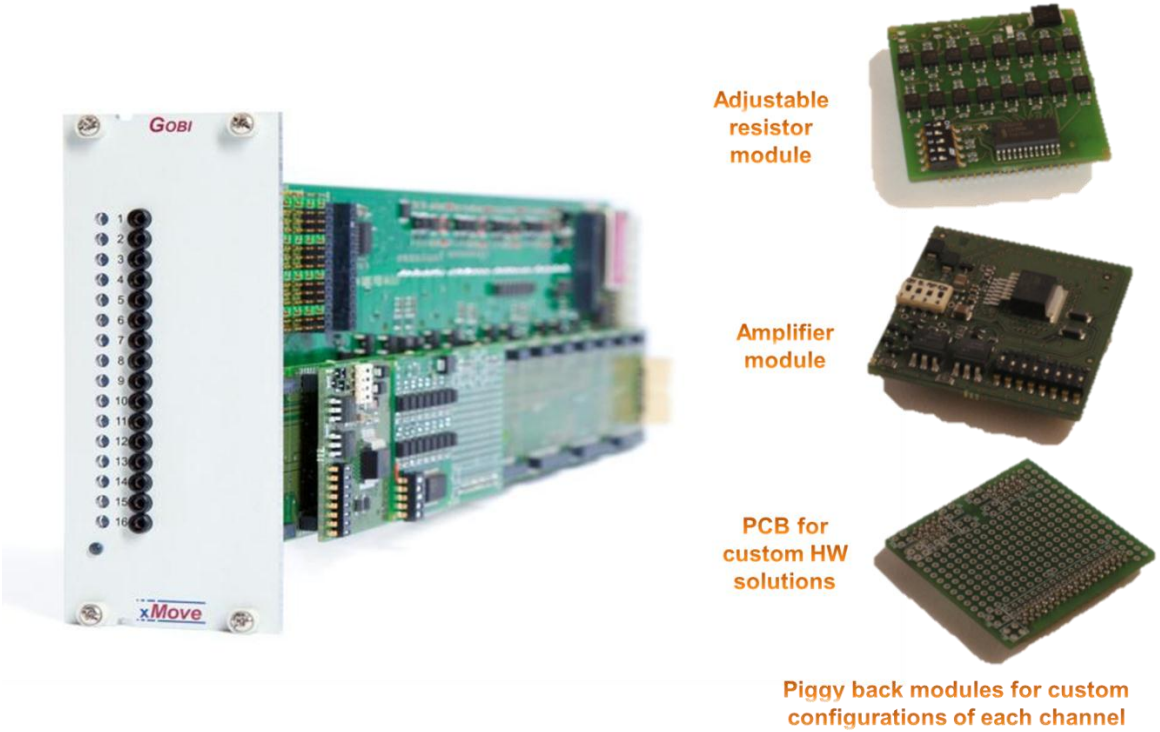

Figure 7, GOBI Fault insertion and signal conditioning board

The Gobi FISC (Fault Injection, Signal Conditioning) board provides a flexible solution to connect the Device Under Test (DUT) to the computerized I/O, for simulation and test. Gobi provides customized signal conditioning for test during normal conditions. Furthermore, Gobi has break-up and short-circuits functionality for testing abnormal conditions, required when testing robustness and system safety. The board uses Solid State Relays (SSR).

6.3.1 Electrical and mechanical parameters

- 16 bi-directional channels / board
- Power supply: 24VDC.
- Operating voltage range: 60V within -60V to +60V (120V channel isolation).
- Max continuous current per channel: 15A (peak 100A/1s).
- Parallel connection of channels (software configurable) gives up to 100A.
- PCB size: 400x100 mm.
- 3U, 10TE according to 19” standard, IEC 60297.

6.3.3 GOBI features

- 2mm test point and three-color LED status indication of each channel.
- Built in digital signal conditioning enables the use of low-cost DAQ.
  - Any signal can be converted to an opto-isolated digital output.
  - Adjustable threshold 2–25V.

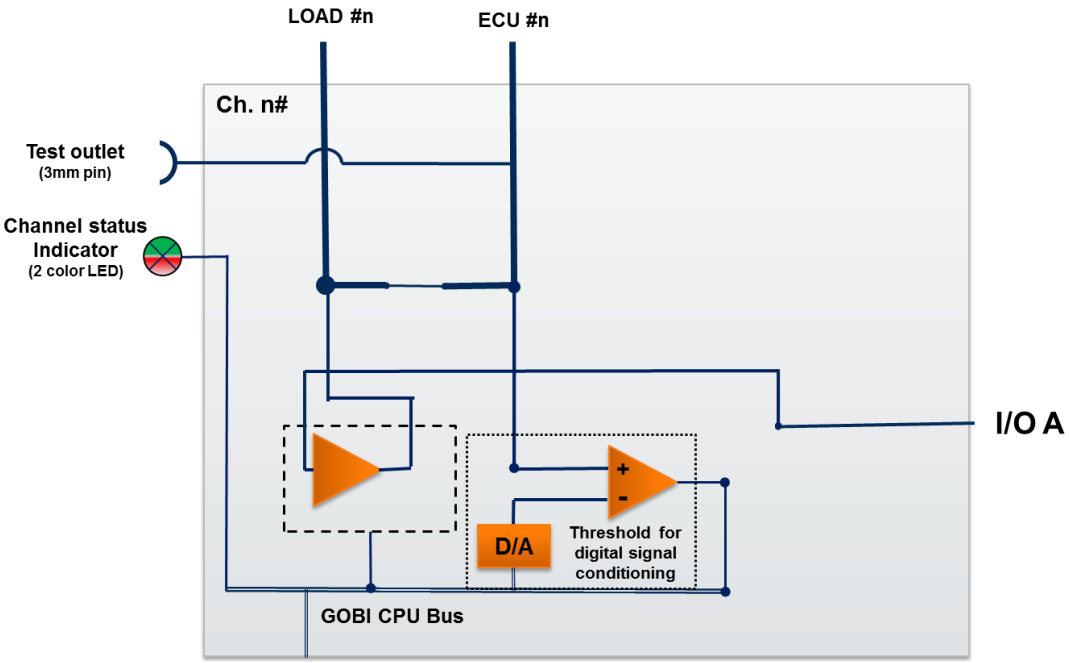

Figure 8, GOBI features, digital signal conditioning

- Fault injection: open circuit, short circuit to supply, ground or other channel.
- Built-in logic prevents accidental short circuit and protects the DAQ modules.
- Over-voltage protection and soft-fuses using temperature monitoring.
- Galvanic isolation between test channels and on-board electronics.

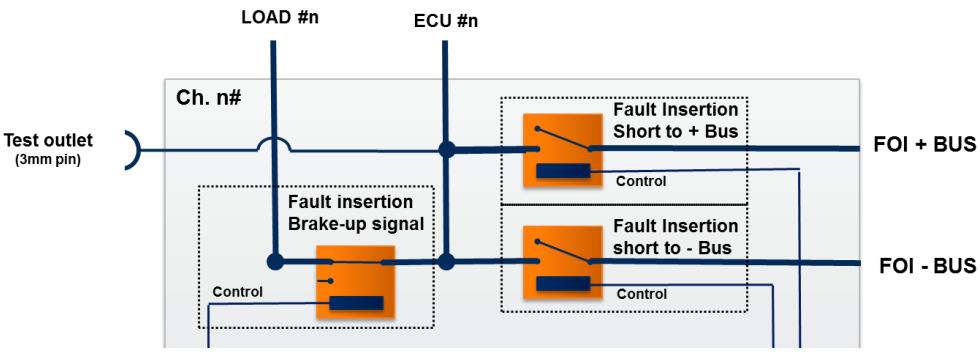

Figure 9, GOBI features, Fault injection

- Piggy-back area for customized signal conditioning.
  Typical applications:
  - Resistive loads.
  - Voltage conversion for analog I/O.
  - High precision current measurement.
  - Customized fault injection.

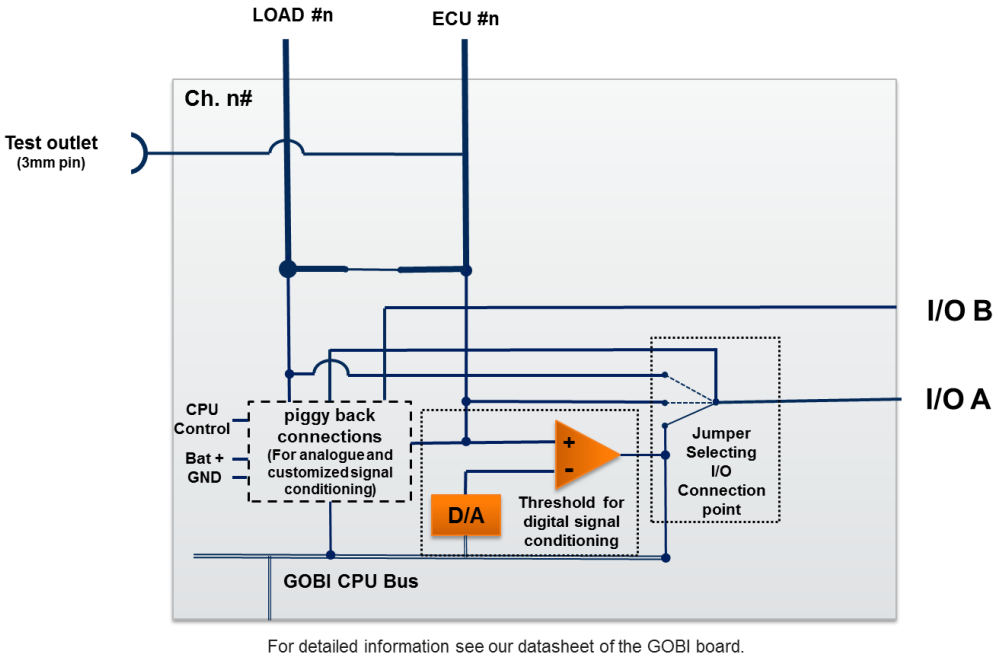

Figure 10, GOBI features, Piggy back area

6.3.4 Computer interface

- RS232/485 interface.
- Signal status read-out.
- Fault injection operation.
- Piggyback I/O control.
- Fuse monitoring.
- Fault injection protection logic (Safety modes).
- Digital input signal configuration (Threshold and polarity).
- Shipped with an easy to use interactive control panel and a LabVIEW driver.

6.4 **DAQ I/O**

Our recommended DAQ for our systems are cRIO modules from National Instruments fitted on FPGA based chassis.

Those modules are proven rugged, reliable and are isolated.

Combined with the FPGA technology, the modules can customize the I/O for advanced measurement or sensor simulation.

By combining the cRIO modules with our signal conditioning we can provide a large varity I/O solutions.

The chassis with the I/O modules are then connected to the PC/PXI using USB, Ethernet or (for realtime applications) EtherCAT.

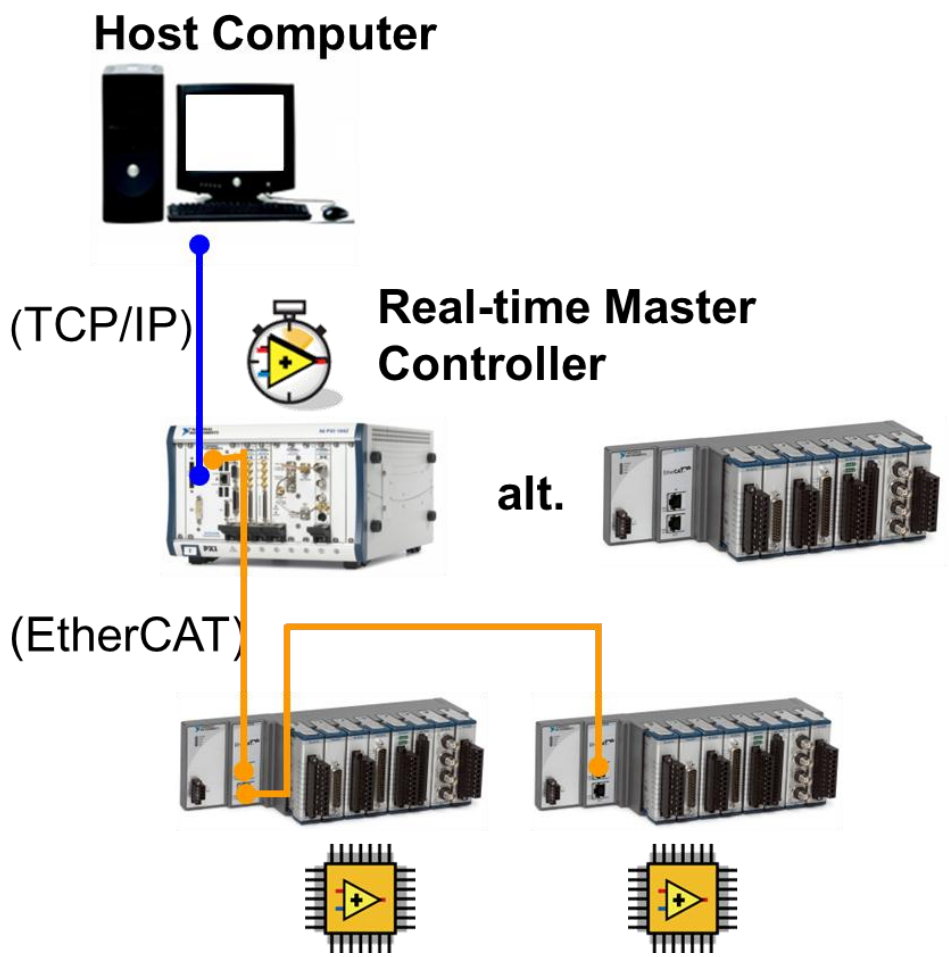

Figure 11, Distributed I/O using EtherCAT

For more information regarding the cRIO modules see: www.ni.com

6.5 PC or PXI Computer

Figure 12, PXI chassis with external multicore PC running LabVIEW-RT

The heart in our system is using the PC technology, either as an ordinary PC running windows or the industrial PC standard PXI that can run either Windows or LabVIEW-RT.

Any of those solutions provides enough computer power and system bandwidth. When this is not sufficient, additional calculation power can even be added by using the FPGA technology.

The PXI platform is a future proof platform, enabling additional interfaces such as CAN, Ethernet or even Audio, Video or RF signals.

6.6 Small test system

Our smallest system fits into a desktop box. Power supply can be either internal (fixed voltage) or external.

Even with its small size it's still flexible due to the FPGA technology and all wiring is easy accessed under the cover of the box.

Figure 13, Small test system

6.7 Mid size test system

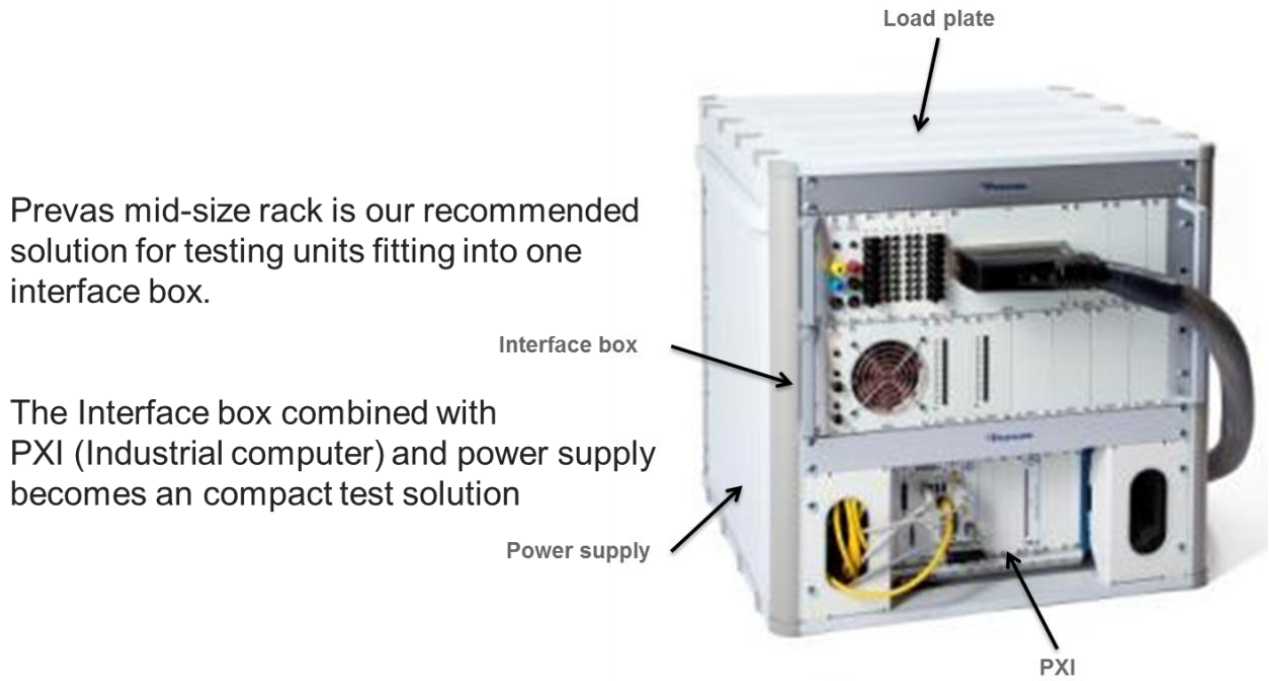

Figure 14, Mid-size test system

6.8 Rack

Our large test systems are fitted in one or several standard 19” rack/s.

Our recommended size is 800x1000x1800mm (excluding fan).

The rack is equipped with cable outlets on the sides, enabling the ECUs to be connected to the rack when the doors are closed. This ensures a good working condition for the testers using the systems.

Each interface box can also be pulled out on sliding shelves and be accessed when the system is in operation.

Silent, high capacity fan

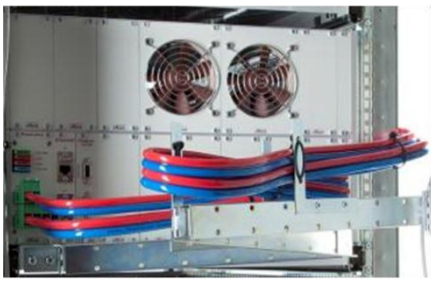

Interface boxes mounted on sliding shelves for easy access

PXI chassis with MXI link to rack mounted multicore RT computer

CAN and 1587 distribution units

Figure 15, large test systems